andis®

MODEL AGC CLIPPER 120 VOLT

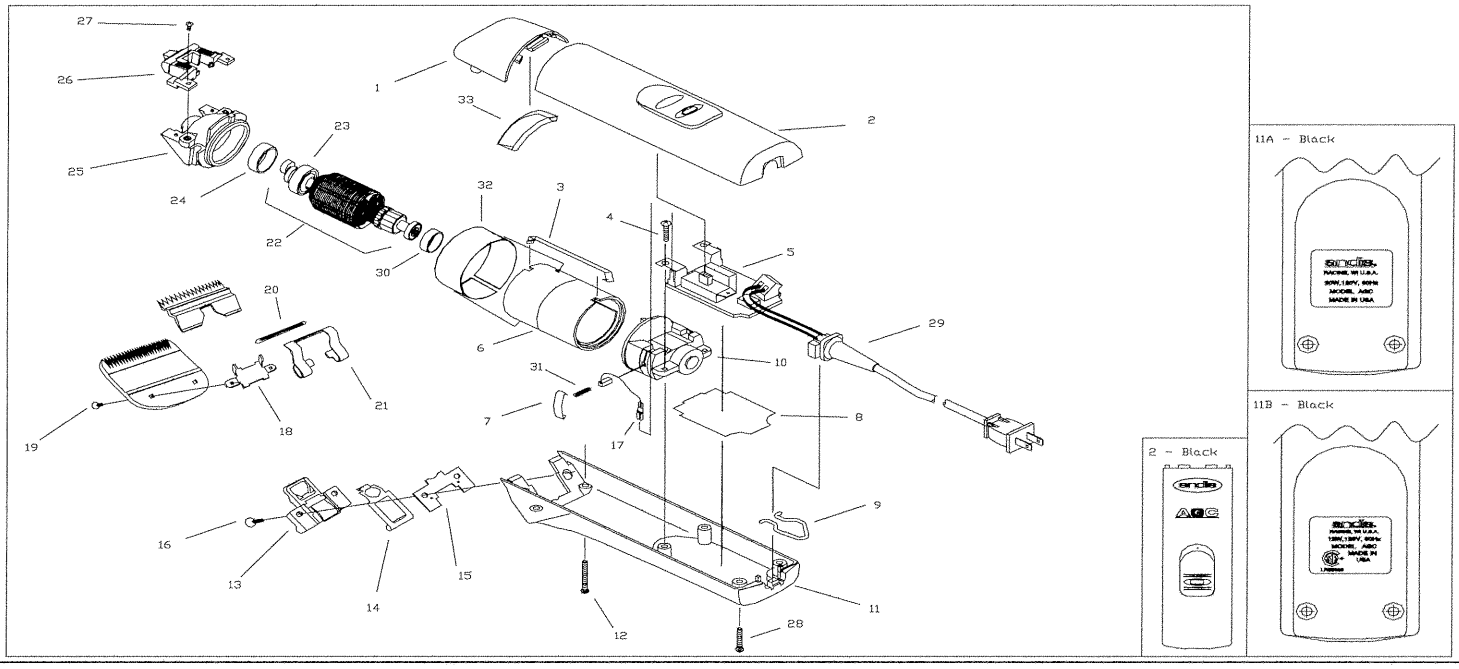

ITEM NO.	PART NO.	DESCRIPTION	QTY. REQ'D
1	65267	Drive Cap (Black)	1
2	22958	Upper Housing Assembly - Black	1
3	27198	Motor Frame Clip	1
4	21692	Screw	1
5	22682	Switch and Circuit Board Assembly	1
6	27352	Field Assembly	1
7	65805	Brush Retaining Clip	2
8	64958	Insulator (CSA Only)	1
9		Hanger Bail	
9a	22267	(for units after 7/3/03)	1
9b	25061	(for units before 7/3/03)	1
10	64945	Rear Motor Frame	1
11		Lower Housing	
11a	65253	Lower Housing (AGC USA) - Black	1
11b	22848	Lower Housing (AGC CSA) - Black	1
12	64606	Front Housing Screw	2
13	S64608	Hinge Assembly	1
14	64537	Blade Lock	1
15	64535	Lock Keeper	1
16	27861	Blade Hinge Screw	2
17	27847	Carbon Brush w/ Shunt	2
18	64003	Blade Bracket	1
19	64139	Blade Screw	2

ITEM NO.	PART NO.	DESCRIPTION	QTY. REQ'D
20	64027	Blade Guide	1
21	64013	Tension Spring	1
22		Armature Assembly	
22a	27072	Armature Assy. (includes #23a) USA	1
22b	27994	Armature Assy. (includes #23b) CSA	1
23		Cam and Bearing Assembly	
23a	27251	Metal Cam and Bearing Assy (USA)	1
23b	27854	Plastic Cam and Bearing Assy (CSA)	1
24	21068	Large Bearing Cup	1
25	65013	Motor Frame	1
26	22319	Blade Drive Assembly	1
27	15766	Blade Drive Screw	2
28	22086	Rear Housing Screw	2
29	64250	Cord Set	1
30	21067	Small Bearing Cup	1
31	65806	Brush Spring	2
32	64991	Oil Seal	1
33	17091	Self-Adhesive Foam Pad	1

IMPORTANT INFORMATION

When ordering repair parts, include part number, part name and model of trimmer. For best performance, trimmer blades should be CLEANED and OILED with Andis Clipper Oil before and after use, If repair is necessary, return to any Andis Authorized Repair Service Station, or to Andis Company, 1800 Renaissance Blvd., Sturtevant, Wisconsin, 53177 U.S.A.. Pack carefully, mail either Insured Parcel Post, or U.P.S. , attach a letter to outside of package explaining difficulty.